Model Number

NCN25-F35-A2-250-15M-V1

Features

- **Comfort series**
- **25 mm embeddable mountable**
- **Extreme additional temperature range of sensor component, 0 ... 250 °C**
- **15 m cable between sensor and amplifier with metal case**
- **Appropriate for conveyor chains**
- **Minimum bending radius of 15 cm for movable laying**

Connection

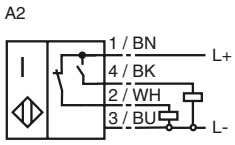

Accessories

V1-G
Non pre-wired cable socket

V1-W-2M-PUR
Cable connector

V1-G-2M-PUR
Cable connector

Dimensions

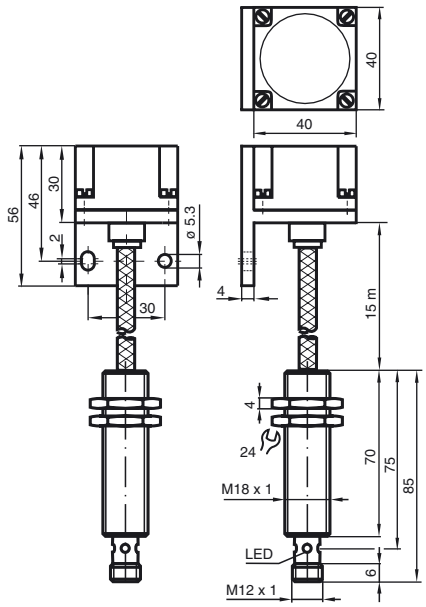

Technical Data

General specifications		
Switching element function		PNP Antivalent
Rated operating distance	s_n	25 mm
Installation		embeddable
Output polarity		DC
Assured operating distance	s_a	0 ... 20 mm
Reduction factor r_{Al}		0.5
Reduction factor r_{Cu}		0.5
Reduction factor r_{V2A}		0.6 ... 1
Mounting angle		Al
Amplifier housing		Stainless steel
Nominal ratings		
Operating voltage	U_B	10 ... 30 V
Switching frequency	f	0 ... 20 Hz
Hysteresis	H	0.3 ... 5 typ. 2 %
Reverse polarity protection		protected against reverse polarity
Short-circuit protection		pulsing
Voltage drop	U_d	≤ 3 V
Operating current	I_L	0 ... 200 mA
No-load supply current	I_0	≤ 25 mA
Indication of the switching state		Multihole-LED, yellow
Standard conformity		
Standards		IEC / EN 60947-5-2:2004
Ambient conditions		
Ambient temperature		0 ... 250 °C (273 ... 523 K)
Mechanical specifications		
Connection type		V1-connector
Cable version		PFA cable, with armour of stainless steel
Core cross-section		3 x 0.34 , screened
Housing material		PTFE / Al / V2A
Sensing face		PTFE (Teflon)
Protection degree		amplifier IP67 sensor IP40
Note		- amplifier 0 °C ... 70 °C - r_{V2A} dep. on thickness of measurement plate d: r_{V2A} = 1 for d < 1mm Additional accessory: Protective cover SH-F35 is available for use in areas where there is moisture and as a means of mechanical protection.
Approvals and certificates		
UL approval		cULus Listed, General Purpose Class 2 power source

Release date: 2009-02-17 10:12 Date of issue: 2009-02-17 187480_ENG.xml

Copyright Pepperl+Fuchs
Pepperl+Fuchs Group www.pepperl-fuchs.com
USA: +1 330 486 0001 fa-info@us.pepperl-fuchs.com
Germany: +49 621 776-4411 fa-info@pepperl-fuchs.com
Singapore: +65 6779 9091 fa-info@sg.pepperl-fuchs.com

Supplementary information

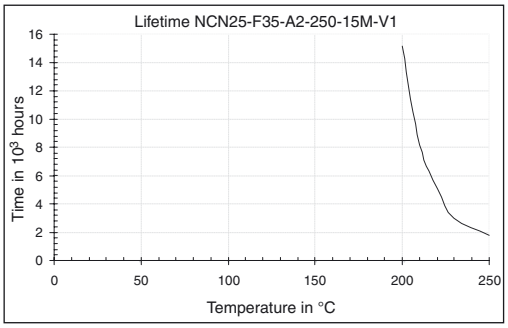

Installation:

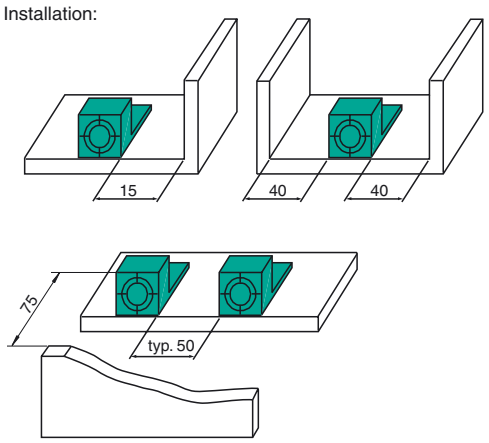

Accessories:
Protective Cover SH-F35

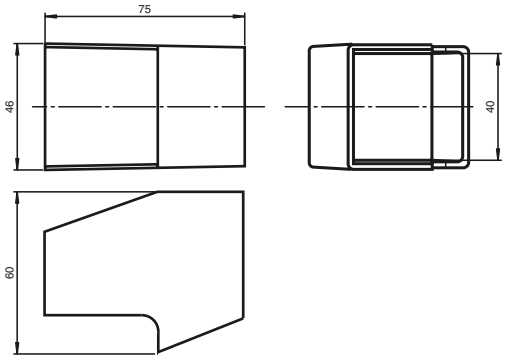

Release date: 2009-02-17 10:12 Date of issue: 2009-02-17 187480_ENG.xml

Subject to modifications without notice
Copyright Pepperl+Fuchs
Pepperl+Fuchs Group
www.pepperl-fuchs.com
USA: +1 330 486 0001
fa-info@us.pepperl-fuchs.com
Germany: +49 621 776-4411
fa-info@pepperl-fuchs.com
Singapore: +65 6779 9091
fa-info@sg.pepperl-fuchs.com
PEPPERL+FUCHS
SENSING YOUR NEEDS